HORIZONTAL SECTIONS

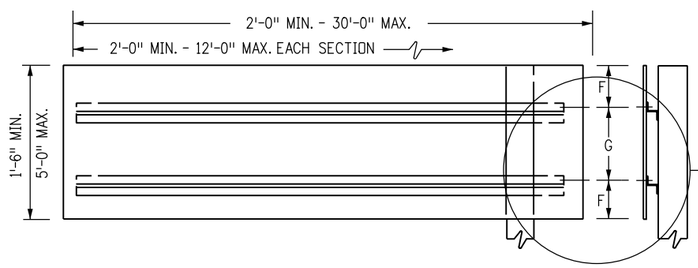

SECTIONS REQUIRED

WIDTH	*SECTIONS
2'-0" TO 12'-0"	1
12'-6" TO 24'-0"	2
24'-6" TO 30'-0"	3

*NUMBER OF SECTIONS SHALL NOT EXCEED MAXIMUM SHOWN IN TABLE

SEE TYPICAL DETAIL ON SHEET 2

VERTICAL SECTIONS

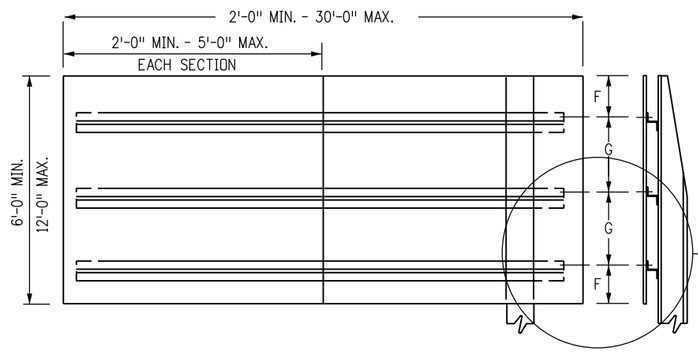

SECTIONS REQUIRED

WIDTH	*SECTIONS
2'-0" TO 5'-0"	1
5'-6" TO 10'-0"	2-3
10'-6" TO 15'-0"	3-4
15'-6" TO 20'-0"	4-5
20'-6" TO 25'-0"	5-7
25'-6" TO 30'-0"	6-8

*NUMBER OF SECTIONS SHALL NOT EXCEED MAXIMUM SHOWN IN TABLE

SEE TYPICAL DETAIL ON SHEET 2

MULTI-VERTICAL SECTIONS

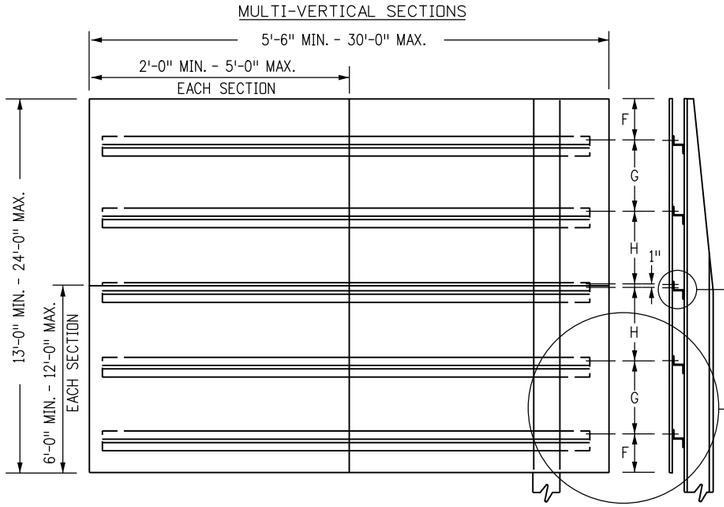

SECTIONS REQUIRED

WIDTH	*SECTIONS
5'-6" TO 10'-0"	4-6
10'-6" TO 15'-0"	6-8
15'-6" TO 20'-0"	8-10
20'-6" TO 25'-0"	10-14
25'-6" TO 30'-0"	12-16

*NUMBER OF SECTIONS SHALL NOT EXCEED MAXIMUM SHOWN IN TABLE

SEE TYPICAL SEAM CLOSURE DETAIL ON SHEET 2

SEE TYPICAL DETAIL ON SHEET 2

TYPICAL PANEL ELEVATIONS

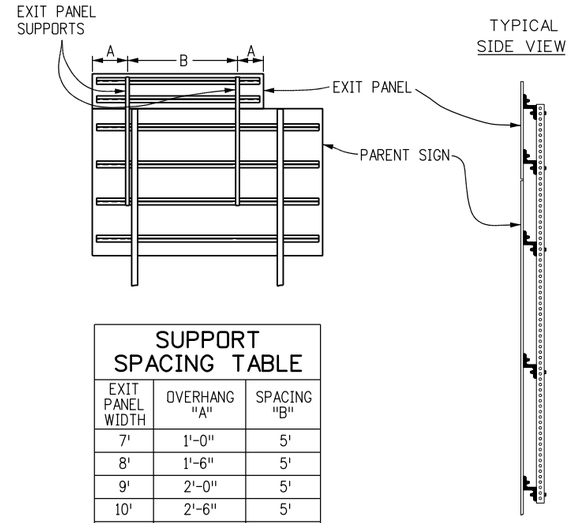

SUPPORT SPACING TABLE

EXIT PANEL WIDTH	OVERHANG "A"	SPACING "B"
7'	1'-0"	5'
8'	1'-6"	5'
9'	2'-0"	5'
10'	2'-6"	5'
11'	2'-6"	6'
12'	2'-6"	7'

TYPICAL EXIT PANEL INSTALLATION FOR GROUND SIGNS

GENERAL NOTES

1. CLASS III SIGN PANELS ARE ALL THOSE WHERE A SINGLE PANEL REQUIRES 3 OR MORE BACKING ZEES (THESE WILL BE SIGN PANELS THAT ARE 72 IN. OR MORE IN HEIGHT) AND ANY PANELS THAT ARE PART OF A CLASS III ASSEMBLY SUCH AS EXIT PANELS. ALL CLASS III PANELS SHALL BE 0.125 IN. MINIMUM THICKNESS SHEET ALUMINUM.
2. SEE THE APPLICABLE STANDARDS FOR SIGN PLACEMENT, FOOTING DETAILS AND POST SPACING TABLES.
3. A 3/8 IN. 90° COUNTERSUNK HUCKBOLT AND COLLAR SHALL BE USED TO FASTEN THE SIGN PANEL TO THE BACKING ZEE. A HEX-HEAD BOLT WITH NUT AND WASHERS SHALL BE USED TO FASTEN THE BACKING ZEE TO A TIMBER POST OR TO A STEEL POST.
4. A FLAT WASHER SHALL BE PLACED BETWEEN THE BOLT HEAD AND THE POST FLANGE. A LOCK WASHER SHALL BE PLACED UNDER THE NUT ON A STEEL POST OR A BACKING ZEE. A 1 1/2" DIAMETER WASHER SHALL BE PLACED UNDER THE BOLT HEAD ON A TIMBER POST.
5. ALL EXPOSED SIGN PANEL SECTION JOINTS, EXCEPT THE MULTI-VERTICAL SECTIONS HORIZONTAL SEAM, SHALL BE COVERED ON THE BACKSIDE OF THE SIGN PANEL WITH AN ALUMINUM CLOSURE STRIP. CLOSURE STRIPS SHALL BE RIVETED OR TAPED. SEE FABRICATIONS NOTES.
6. SECTIONS ILLUSTRATED BASED ON UTILIZING 12' X 5' STOCK. 4' WIDE STOCK MAY BE USED WITH APPROPRIATE ADJUSTMENT IN NUMBER OF SECTIONS.
7. ALL SIGNS SHALL BE FABRICATED USING RETROREFLECTIVE SHEETING CONFORMING TO ASTM D4956. THE TYPE SHALL BE AS DESCRIBED IN THE STANDARD SPECIFICATIONS AND/OR AS SHOWN ON THE PLANS.

EXIT PANEL NOTES

1. THE EXIT PANEL SHALL BE MOUNTED WITH TWO SUPPORTS. RIGHT HAND EXITS REQUIRE THE EDGE OF THE EXIT PANEL TO BE MOUNTED EVEN WITH THE RIGHT EDGE OF THE PARENT SIGN. LEFT HAND EXITS REQUIRE THE LEFT EDGE OF THE EXIT PANEL TO BE MOUNTED EVEN WITH THE LEFT EDGE OF THE PARENT SIGN.
2. THE SUPPORTS SHALL BE SQUARE STEEL TUBING A MINIMUM WIDTH OF 2-1/4" WITH 7/16" INCH HOLES PUNCHED OR DRILLED ON 1" CENTERS ALONG THE LENGTH OF EACH SIDE WHILE MAINTAINING A MINIMUM SECTION MODULUS OF 0.499 CUBIC INCHES. THE STEEL MUST HAVE A MINIMUM YIELD STRESS OF 33 KSI. ALTERNATELY, ZEE BAR MAY USED FOR THE SUPPORT MEMBERS WITH 7/8" HOLES PUNCHED WHERE NEEDED.
3. THE SUPPORTS SHALL BE FASTENED TO THE BACKING ZEE USING 3/8" BOLTS.
4. THE EXIT PANEL SUPPORT MAY BE MOVED 6" IF IT CONFLICTS WITH THE PARENT SIGN SUPPORT.
5. EXIT PANEL MOUNTING WILL BE PAID FOR AS PART OF THE CLASS III SIGN PANEL.
6. EXIT PANEL SUPPORTS SHALL BE ATTACHED TO A MINIMUM OF THREE BACKING ZEES.

Computer File Information	
Creation Date: 07/04/12	Initials: KCM
Last Modification Date: 12/17/14	Initials: KEN
Full Path: www.coloradodot.info/library/traffic/traffic-s-standard-plans	
Drawing File Name: S-614-04_1of3.dgn	
CAD Ver.: MicroStation V8 Scale: Not to Scale Units: English	

	Sheet Revisions	
	Date:	Comments
R-1	12/17/14	SHEET 2 - ADDED TWO "TYPICAL BOTTOM PLAQUE INSTALLATION FOR GROUND SIGNS" DETAILS
R-X		
R-X		
R-X		

Colorado Department of Transportation
4201 East Arkansas Avenue
Denver, Colorado 80222
Phone: (303) 757-9543
Fax: (303) 757-9219
Safety & Traffic Engineering Branch KCM/KEN

CLASS III SIGNS

Issued By: Safety & Traffic Engineering Branch July 4, 2012

STANDARD PLAN NO.

S-614-4

Sheet No. 1 of 3

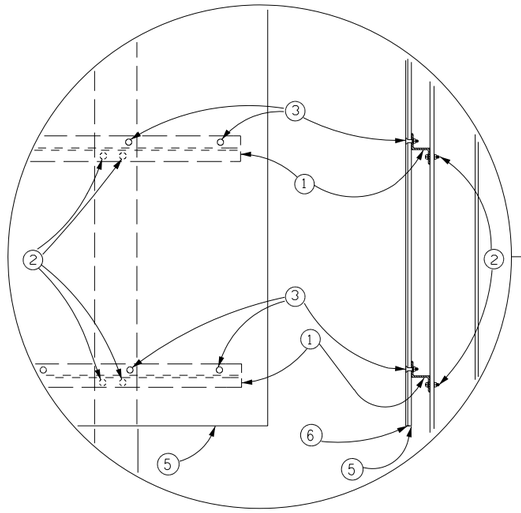

TYPICAL ELEVATION DETAIL

FABRICATION NOTES

1. BACKING ZEE. SEE "ZEE SPACING TABLE" ON SHEET 3. ALUMINUM ALLOY 6061-T6. EACH ZEE TO BE PROVIDED WITH A 9/16 IN. X 2 IN. HORIZONTAL SLOT FOR EACH POST MOUNTING BOLT.
2. 3/8 IN. HEX-HEAD BOLT WITH NUT AND WASHERS; 2 PER BACKING ZEE PER POST REQUIRED. WASHERS ON POST SHALL BE 1 1/2 IN. DIA.
3. 3/8 IN. (NO. 6) 90 DEG. COUNTERSUNK HUCKBOLT WITH COLLAR.
4. 2 IN. X 0.025 IN. ALUMINUM CLOSURE STRIP RIVETED ABOVE THE TOP Z AND BELOW THE BOTTOM Z OR ALUMINUM CLOSURE STRIPS ATTACHED ABOVE, BETWEEN, AND BELOW THE ZEES WITH A VERY HIGH BOND (VHB) DOUBLE ACRYLIC FOAM TAPE, OR APPROVED EQUIVALENT. MANUFACTURER'S RECOMMENDATIONS SHALL BE ADHERED TO FOR THIS APPLICATION.
5. SHEET ALUMINUM: 0.125 IN. MINIMUM THICKNESS.
6. ADHESIVES SHALL BE CLASS I OR CLASS II ADHESIVES OF ASTM D4956.
7. BACKING ZEES SHALL EXTEND TO THE EDGE OF THE PANEL ON 6 FT., 7 FT. & 8 FT. WIDE SIGNS.

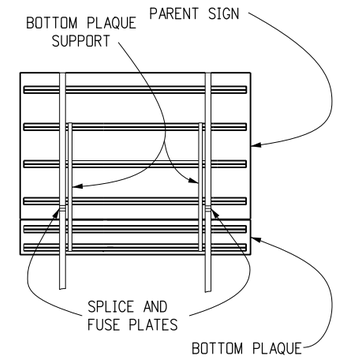

*TYPICAL BOTTOM PLAQUE INSTALLATION FOR GROUND SIGNS (FULL WIDTH PLAQUE SUPPORT)

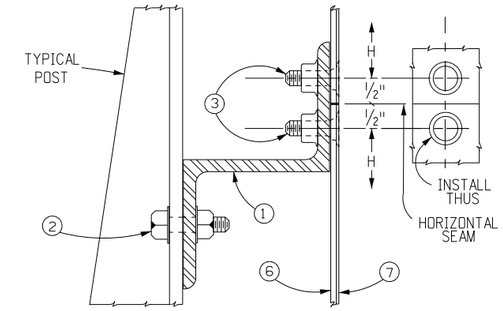

TYPICAL DETAIL SEAM CLOSURE ZEE

(MULTIPLE-VERTICAL SECTIONS, HORIZONTAL SEAMS)

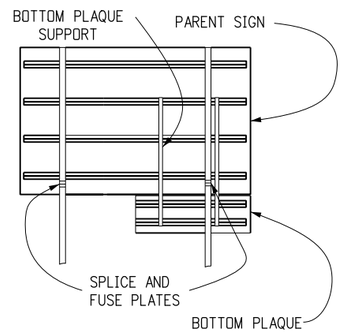

*TYPICAL BOTTOM PLAQUE INSTALLATION FOR GROUND SIGNS (PARTIAL WIDTH PLAQUE SUPPORT)

* IN NO CASE SHALL ANY PORTION OF A SIGN PANEL OR PLAQUE BE ATTACHED TO A BREAKAWAY POST BELOW THE FUSE AND SPLICE PLATES.

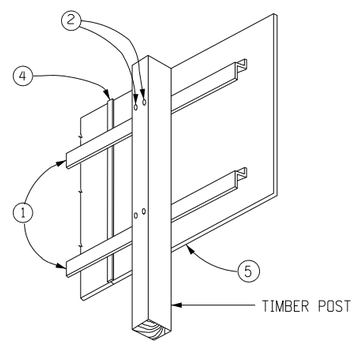

TYPICAL VIEW

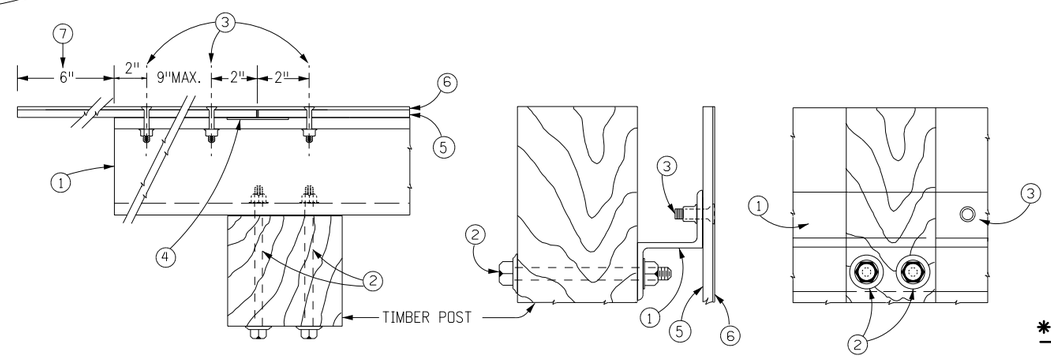

TYPICAL TIMBER POST INSTALLATION

PANEL FABRICATION AND MOUNTING DETAILS

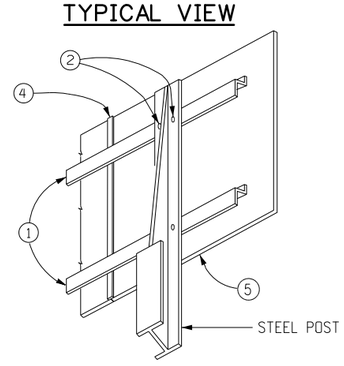

TYPICAL VIEW

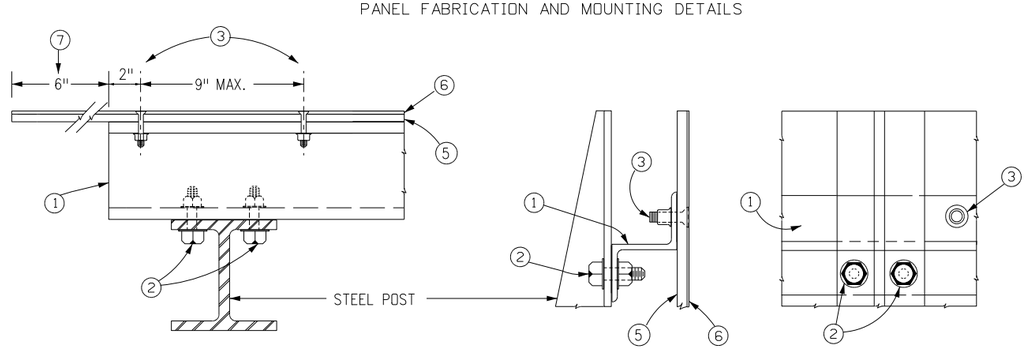

TYPICAL STEEL POST INSTALLATION

PANEL FABRICATION AND MOUNTING DETAILS

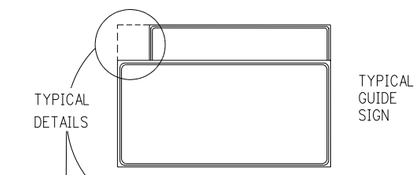

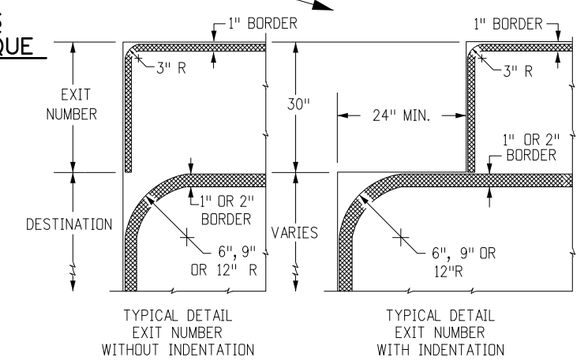

TYPICAL BORDER DETAILS WITH EXIT NUMBER

Computer File Information		
Creation Date: 07/04/12	Initials: KCM	
Last Modification Date: 12/17/14	Initials: KEN	R-1
Full Path: www.coloradodot.info/library/traffic/traffic-s-standard-plans		R-X
Drawing File Name: S-614-04_2of3.dgn		R-X
CAD Ver.: MicroStation V8 Scale: Not to Scale Units: English		R-X

Sheet Revisions	
Date:	Comments
12/17/14	ADDED TWO "TYPICAL BOTTOM PLAQUE INSTALLATION FOR GROUND SIGNS" DETAILS

Colorado Department of Transportation
4201 East Arkansas Avenue
Denver, Colorado 80222
Phone: (303) 757-9543
Fax: (303) 757-9219
Safety & Traffic Engineering Branch KCM/KEN

CLASS III SIGNS

Issued By: Safety & Traffic Engineering Branch July 4, 2012

STANDARD PLAN NO.

S-614-4

Sheet No. 2 of 3

POST SPACING TABLE

FOR SHEET ALUMINUM SIGN PANELS

WIDTH OF SIGN	NO. OF POSTS	OVERHANG "A"	POST SPACING "B"
1'-6"	1	0'-9"	
2'-0"	1	1'-0"	
2'-6"	1	1'-3"	
3'-0"	1	1'-6"	
4'-0"	1	2'-0"	
5'-0"	1	2'-6"	
6'-0" (1), (2)	2	0'-3"	5'-6"
7'-0" (1), (2)	2	0'-3"	6'-6"
8'-0" (1)	2	0'-3"	7'-6"
9'-0"	2	0'-9"	7'-6"
10'-0"	2	1'-3"	7'-6"
11'-0"	2	1'-9"	7'-6"
12'-0"	2	2'-3"	7'-6"
13'-0"	2	2'-6"	8'-0"
14'-0"	2	2'-6"	9'-0"
15'-0"	2	3'-0"	9'-0"
16'-0"	2	3'-3"	9'-6"
17'-0"	2	3'-3"	10'-6"
18'-0"	2	3'-6"	11'-0"
19'-0"	2	3'-9"	11'-6"
20'-0"	2	4'-0"	12'-0"
21'-0"	3	2'-6"	8'-0"
22'-0"	3	3'-0"	8'-0"
23'-0"	3	3'-6"	8'-0"
24'-0"	3	3'-8"	8'-4"
25'-0"	3	4'-0"	8'-6"
26'-0"	3	4'-0"	9'-0"
27'-0"	3	4'-0"	9'-6"
28'-0"	3	4'-0"	10'-0"
29'-0"	3	4'-0"	10'-6"
30'-0"	3	4'-0"	11'-0"

(1) BACKING ZEE SHALL EXTEND TO THE EDGE OF THE PANEL, EXCEPT FOR EXIT PANELS ATTACHED BY SQUARE STEEL TUBING.

(2) 6" X 6" TIMBER POSTS WILL NOT BE USED FOR THESE SIZES OF PANEL.

ZEE SPACING TABLE

FOR 3" X 2 11/16 X 2.33 ALUMINUM BACKING ZEES

SIGN PANEL HEIGHT	NUMBER OF ZEES	OVERHANG "F"	SPACING "G"	SIGN PANEL HEIGHT	NUMBER OF ZEES	OVERHANG "F"	SPACING "G"	SPACING "H"
1'-6"	2	0'-4"	0'-10"	13'-0"	7	1'-0"	1'-10"	1'-9 1/2"
2'-0"	2	0'-5"	1'-2"	14'-0"	7	0'-6"	2'-2"	2'-1 1/2"
2'-6"	2	0'-6"	1'-6"	15'-0"	7	1'-0"	2'-2"	2'-1 1/2"
3'-0"	2	0'-7"	1'-10"	16'-0"	7	0'-6"	2'-6"	2'-5 1/2"
4'-0"	2	0'-11"	2'-2"	17'-0"	7	1'-0"	2'-6"	2'-5 1/2"
5'-0"	2	1'-3"	2'-6"	18'-0"	9	0'-4"	2'-2"	2'-1 1/2"
6'-0"	3	0'-10"	2'-2"	19'-0"	9	0'-10"	2'-2"	2'-1 1/2"
7'-0"	3	1'-0"	2'-6"	20'-0"	9	1'-4"	2'-2"	2'-1 1/2"
8'-0"	4	0'-9"	2'-2"	21'-0"	9	0'-6"	2'-6"	2'-5 1/2"
9'-0"	4	1'-3"	2'-2"	22'-0"	9	1'-0"	2'-6"	2'-5 1/2"
10'-0"	4	1'-3"	2'-6"	23'-0"	11	0'-8"	2'-2"	2'-1 1/2"
11'-0"	5	1'-2"	2'-2"	24'-0"	11	1'-2"	2'-2"	2'-1 1/2"
12'-0"	5	1'-0"	2'-6"					

NOTES: - FOR F, G & H. SEE DETAILS ON SHEET 1.

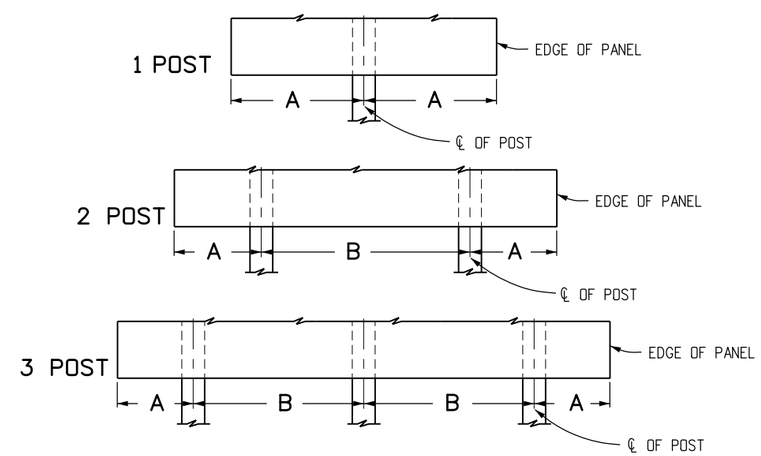

TYPICAL POST SPACING

Computer File Information		Sheet Revisions	
Creation Date: 07/04/12 Initials: KCM		Date:	Comments
Last Modification Date: Initials:	R-X		
Full Path: www.coloradodot.info/library/traffic/traffic-s-standard-plans	R-X		
Drawing File Name: S-614-04_3of3.dgn	R-X		
CAD Ver.: MicroStation V8 Scale: Not to Scale Units: English	R-X		

Colorado Department of Transportation
4201 East Arkansas Avenue
Denver, Colorado 80222
Phone: (303) 757-9543
Fax: (303) 757-9219
Safety & Traffic Engineering Branch KCM/KEN

CLASS III SIGNS

Issued By: Safety & Traffic Engineering Branch July 4, 2012

STANDARD PLAN NO.

S-614-4

Sheet No. 3 of 3