B-606-7A
(Use with B-606-7T)

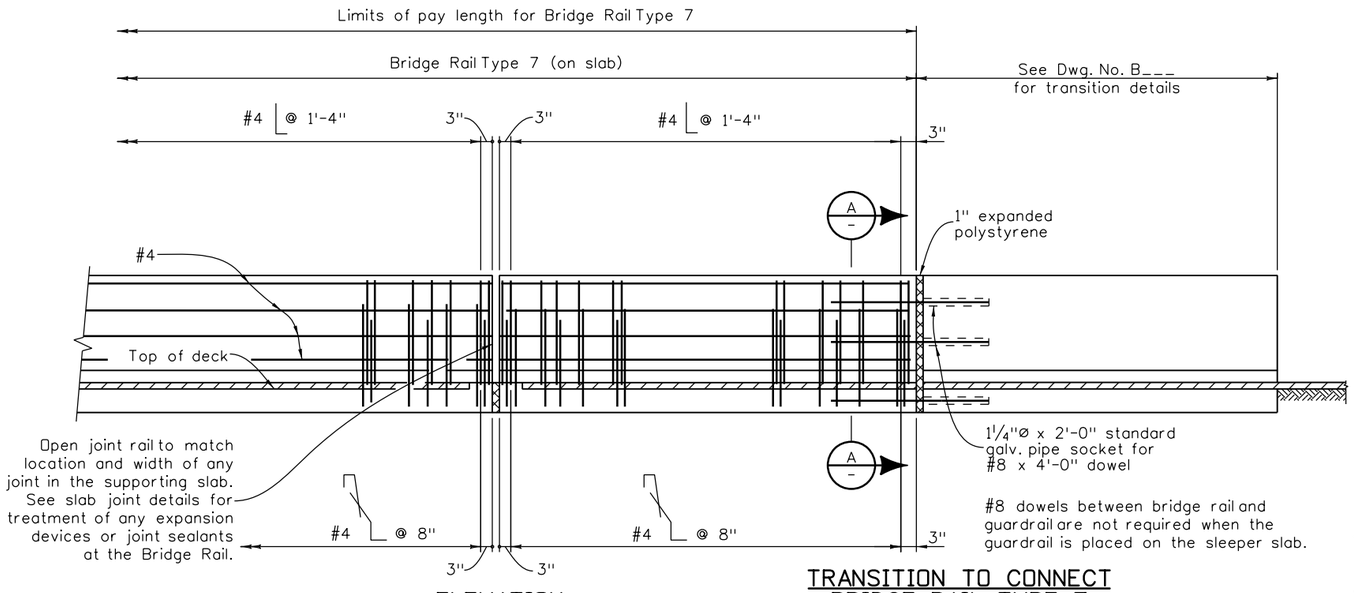

ELEVATION

TRANSITION TO CONNECT BRIDGE RAIL TYPE 7 TO GUARD RAIL

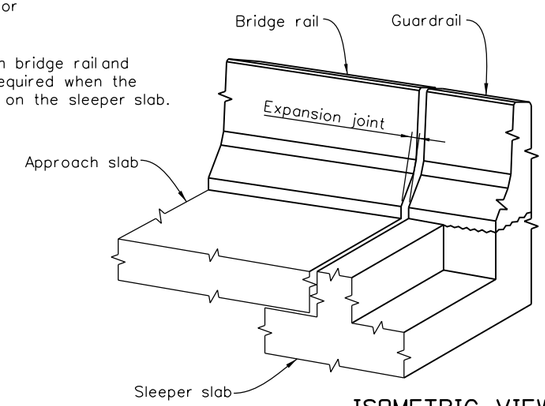

ISOMETRIC VIEW

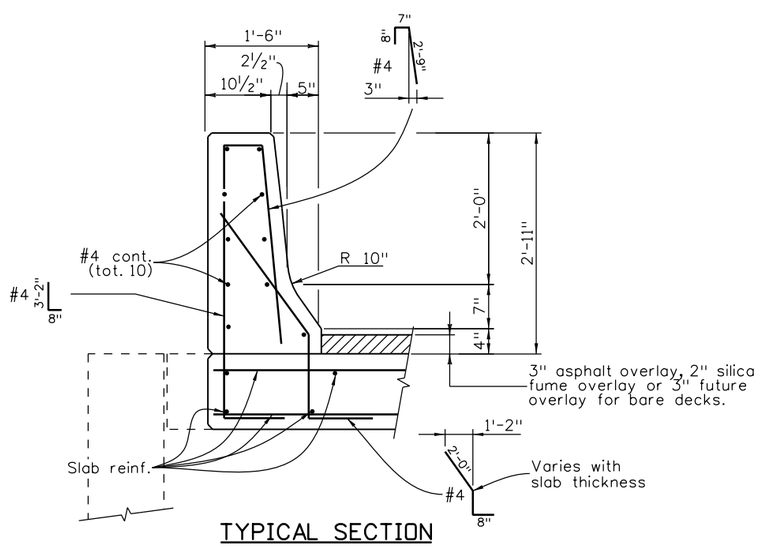

TYPICAL SECTION

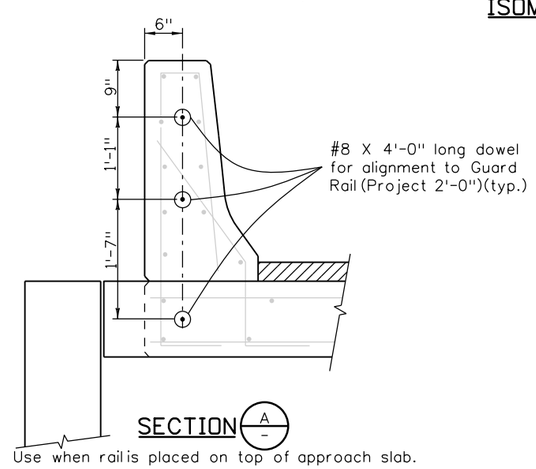

SECTION A

NOTES:

Backfill wingwalls and retaining walls before barrier is placed.

All bridge rail concrete shall be Class D.

Longitudinal reinforcement shall stop at all expansion joints.

Bridge rail shall be constructed plumb.

See Std. M-606-1 and M-606-13 for Guard Rail ype 3 details and details of transition.

Concrete and reinforcing steel shall conform to the requirements of Sections 601 and 602.
Payment will be made under Item 606, Bridge Rail Type 7.

The surface of the rail shall be tested with a 10 foot straightedge laid along the surface in the longitudinal direction. Deviation of the concrete surface from the straightedge shall be less than ¼" plus allowance for roadway horizontal and vertical curvature, if any.

DESIGN DATA

Reinforced Concrete:

Class D Concrete: f'_c = 4,500 psi
Reinforcing Steel: f_y = 60,000 psi

INFORMATION ONLY

Description	Unit	Per Lin. Ft.
Concrete Class D	Cu. Yd.	0.12
Reinforcing Steel (Epoxy Coated)	Lb.	16.2

Revision Dates (Preliminary Stage Only)						
10/98	3/99	11/99	5/00	5/01	4/02	3/07	10/13

Design			Detail			Quantities		
	INITIAL	DATE		INITIAL	DATE		INITIAL	DATE
Designed By	XXX	MM/YY	Detailed By	XXX	MM/YY	Quantities By	XXX	MM/YY
Checked By	XXX	MM/YY	Checked By	XXX	MM/YY	Checked By	XXX	MM/YY

Print Date: $DATE$
File Name: Sheet_B-606-7A.dgn
Horiz. Scale: NTS Vert. Scale: As Noted
Staff Bridge Branch - Unit 022X Unit Leader Initials

Sheet Revisions		
Date:	Comments	Init.

Colorado Department of Transportation
4201 East Arkansas Avenue
Room 107
Denver, CO 80222
Phone: 303-757-9309 FAX: 303-757-9197
Staff Bridge Branch

Initials

As Constructed
No Revisions:
Revised:
Void:

BRIDGE RAIL TYPE 7
(W/GUARDRAIL TYPE 7)

Designer:	XXXXXXXX	Structure Numbers	X-XX-XX
Detailer:	XXXXXXXX		X-XX-XX
Sheet Subset:	BRIDGE	Subset Sheets:	BXX of XXX

Project No./Code
Project Number
Code
Sheet Number

$PLOT_INFO$